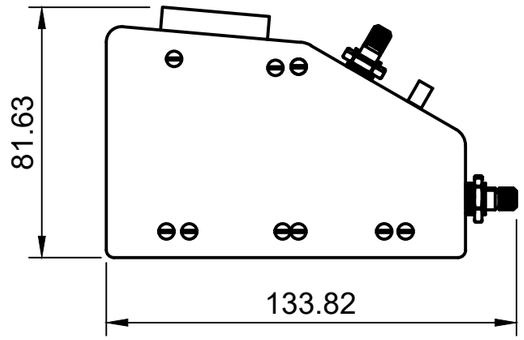

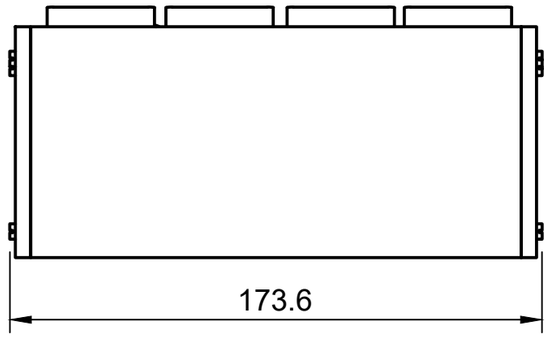

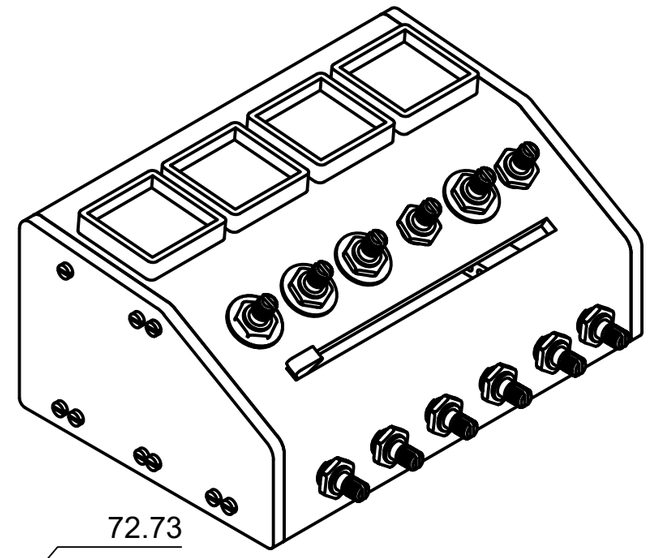

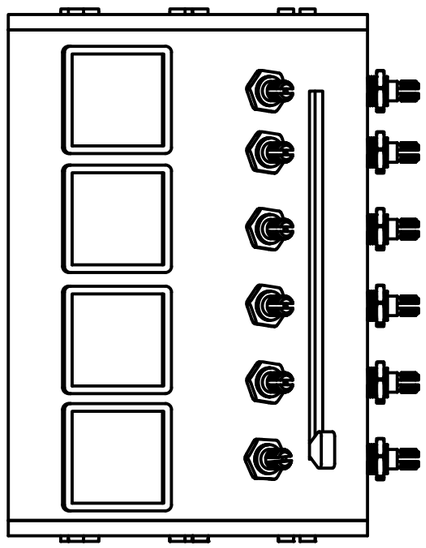

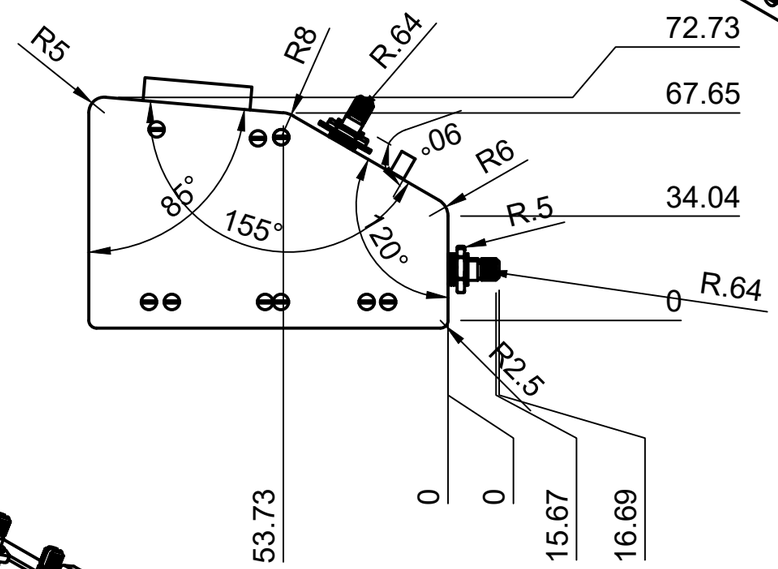

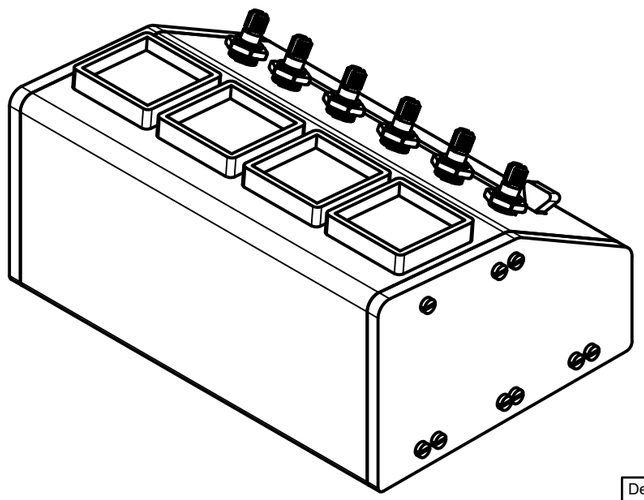

Dept.	Technical reference	Created by	Approved by
		Albin joby 24/03/2026	
		Document type	Document status
		Title Drum Body	DWG No.
			Rev. / Date of issue / Sheet 1/1